CHAPTER

6

ELEMENTARY ARITHMETIC FUNCTIONS

We have introduced the idea that computation can be done with analog circuits. A computation often is described as a **function** that maps **arguments** into a **result**. In any practical computation system, the arguments have **types**. In digital computers, those types are integer, floating point, Boolean, character, and so on.

In the analog world (physical computation), there are two signal types: *voltages* and *currents*. It would be wonderful if there were elegant ways to do every computation just the way we would like with every signal type, but there are not. The analog art form consists of figuring out how to use particular signal types that lend themselves to certain computations, and thus to end up with the computation that we want.

Introductory computer-science courses often start with the basic algorithms for certain elementary functions that you may want to compute. In this chapter, we present such an introduction for analog circuits.

IDENTITY FUNCTIONS

In any formal system, the first operation anyone discusses is the **identity** operation. In analog systems, we need an identity function to make *copies* of signal values, so they can be used as inputs to several different computations.

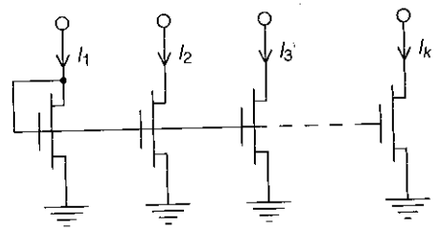

FIGURE 6.1 Current-mirror configuration. A current mirror can be used to make many separate copies of a current-type signal. Here the input current I_1 is replicated in the outputs $I_2, I_3, \ldots, I_k$.

Currents

In Chapter 3, we discussed how we can make copies of currents by using a current mirror. For example, if we need to use the value of I in k places, we can use n-channel transistors in the current-mirror configuration to generate current *sinks* of magnitude $I_1, I_2, \ldots, I_k$, as shown in Figure 6.1.

Several nominally identical current *sources* can be made with a p-channel current mirror. The copies are all independent, and how one of them is used does not affect the ways the others can be used. Current mirrors make excellent copies, with certain limitations. As we noted before, transistors cannot be perfectly matched, so one copy can be different from another by up to a factor of two! Hence, this particular identity function really is a multiplication by a random variable. The uncertainty introduced by the random variable may not matter, in which case we can use the current-mirror technique. If we need more precision, we can copy voltages instead of currents.

Voltages

We have a much more precise identity function for voltage-type signals than we have for current-type ones. It is a uniquely useful circuit using an amplifier with open-circuit output that makes good use of its gain; it is called the **unity-gain follower** (Figure 6.2). The term *follower* is used because the output voltage follows (increases or decreases with) the input voltage, without disturbing the circuit that is computing the input. In subsequent chapters, we will describe many unconventional uses of these followers; we will start with the easy, conventional identity function, and will derive the open-circuit input–output relation.

The amplifier multiplies the input voltage difference by its voltage gain A. The difference of the input voltages $(V_{in} - V_{out})$ multiplied by the voltage gain A,

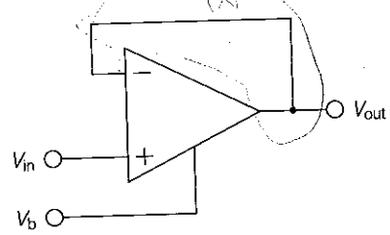

FIGURE 6.2 Schematic of the unity-gain follower. The output current is proportional to the difference between the output voltage and the input voltage. If the follower is connected to a high-resistance load, the output voltage will follow the input voltage.

gives us the output voltage V_{out}:

$$V_{out} = A(V_{in} - V_{out})$$

The *transfer function* of the follower V_{out}/V_{in} thus can be written

$$\frac{V_{out}}{V_{in}} = \frac{1}{1 + \frac{1}{A}} \approx 1 - \frac{1}{A}$$

which is the simplest form of the basic equation in feedback-control theory. The follower takes the gain of the amplifier and uses it to make the output as nearly equal to the input as possible; the residual error due to the finite gain is $1/A$. For many applications, the fraction of 1-percent error introduced by a gain of a few hundred is adequately small. In Chapter 9, we will describe a delay line that can have many hundreds of followers connected in cascade, each input being the output of the previous stage. In such applications, we do best using a version of the amplifier that exhibits high voltage gain, as described in Chapter 5.

A particularly attractive property of the follower circuit is that, for static signals, it does not suffer from the V_{min} problem. From Equation 5.7 (p. 75), we know that the simple transconductance amplifier will not work if its output is below

$$V_{min} = \kappa(\min(V_1, V_2) - V_b) \tag{5.7}$$

In the follower configuration, V_{out} is equal to V_2, and hence V_{out} cannot be below V_{min} as long as the follower is following the input. When the input voltage is decreasing rapidly, and the output voltage cannot keep up, it is possible to have problems due to V_{min}.

ADDITION AND SUBTRACTION

The ability to make copies of signals is important because it allows us to use an intermediate result as input to several subsequent computations. Computation itself, however, is the result of *combining signals* to produce a result that is some function of its inputs. Biological systems have many ways of combining signals, none of which has been well defined in engineering terms. Mathematical notation, although convenient for reasoning about system operation, certainly was not the method used by evolution. Nonetheless, there are many neural operations that can be viewed as sums, differences, multiplications, or divisions. Although we must be careful to avoid an excessively literal interpretation, it is useful to understand how these basic mathematical operations are done in electronic circuits, and to be on the lookout for biological cognates as we proceed.

Voltages

The term **potential difference** is used synonymously with the term *voltage*. Common parlance underscores a fundamental fact about the potential of a single node: in and of itself, it cannot be a *signal*. Any voltage-type signal must have

a **reference** at which its value is defined to be zero. The reference usually is the potential on another node. That reference potential can be a constant, such as V_{DD} or ground, or it can be an active signal node. The basic reason that differential amplifiers are effective is that they use a voltage difference directly as their input. If the two inputs are signals that have the same reference, the differential amplifier subtracts the two signals. If, however, the signal itself is the voltage difference between two active nodes, then the amplifier merely amplifies the signal.

The inherently differential nature of signals is the reason voltage sources always are shown with two terminals. Adding or subtracting two voltage differences will eventually require us to make the output of one signal the reference for another. The point can be seen clearly in Figure 6.3. There are two signals, A and B, shown as abstract voltage sources. When the positive terminal of one signal is used as the reference for the other, the sum of the two signals appears across the two remaining terminals. When the two positive terminals are connected to each other, the difference appears between the two reference nodes. With abstract voltage sources, addition operations were trivial because the sources were **floating**: Either terminal could be connected to any potential without disturbing the signal.

What is trivial when we use abstract sources can be a nightmare when we deal with real signals. The problem always can be traced to one question: *Where is the reference?* In biological and electronic systems, signals usually are not floating. If two signals both are referred to ground, we have the situation shown

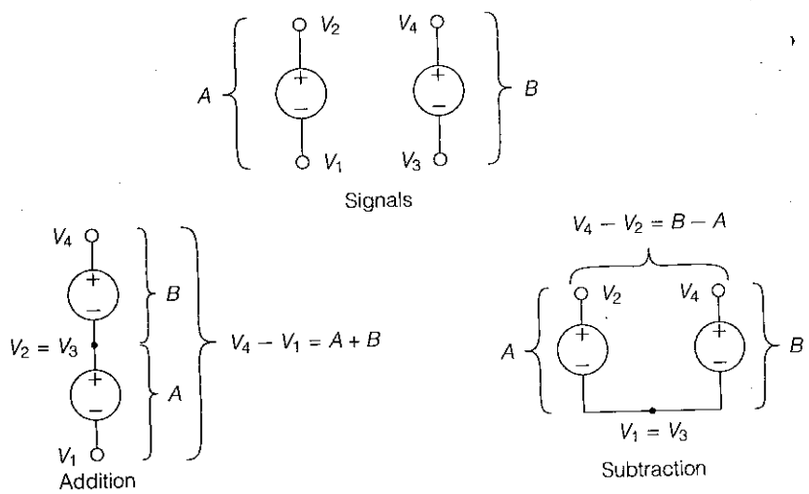

FIGURE 6.3 Addition and subtraction of voltages. These operations require that the output of one voltage source be used as the reference of another. The operations on abstract voltage sources may not be possible in a particular circuit configuration.

in Figure 6.3, and the difference can be taken with a differential amplifier. Under these conditions, however, it is not possible to add the two voltages. In many cases, the situation is not even this nice. Signals often are referred to a potential that is not explicitly available. An example occurs when the offset voltage of an amplifier is much larger than is the signal voltage. The true reference for the signal is the voltage on the negative input of the amplifier plus the offset voltage—a potential that is nowhere available. In biological systems, many signals are referred to the extracellular fluid. Current flowing through the resistance of the fluid can change the local potential in strange and unpredictable ways. Many synaptic arrangements appear to have, as their primary function, the creation of a reference potential. The best-understood example is the horizontal-cell network discussed in Chapter 15. We will have many occasions to revisit these questions in a systems context as we proceed.

Currents

Operations on current-type signals are well defined; they do not suffer from any of the problems mentioned for voltage-type signals. Current is the flow of charge; the zero of current corresponds to no charge moving. The reference for current is thus the coordinate system within which the transistors or neurons are stationary. Unless the circuit is being torn asunder at relativistic velocities (in which case there are more pressing problems), we will have no trouble defining a zero for current.

Addition and subtraction on current-type signals are particularly elegant because they follow from a basic law of physics—Kirchhoff's current law. This law states that the sum of the currents into an electrical node is zero; that is, the sum of the currents out of the node is the same as the sum of the currents into the node.

Kirchhoff's current law is a result of the basic physical concept of *conservation of charge*. Electrical charge is a conserved quantity; it can be neither created nor destroyed. A node cannot, by itself, store any charge. If a node has capacitance with respect to ground, for example, that capacitance is explicitly shown in the schematic as a capacitor with one terminal connected to the node and the other to ground. Any charge flowing into the node will flow out either through the wire to the capacitor, or through some other wire. In physics, this principle is called "conservation of charge"; in electrical engineering, "Kirchhoff's law"; in computer science, "add and subtract."

The basic Kirchhoff adder circuit is shown in Figure 6.4. Positive currents (into the node) are generated by p-channel transistors with their sources at V_{DD}; negative currents (out of the node) are generated by n-channel transistors with their sources at (or near) ground. The transconductance amplifier has the current from one side of a differential pair subtracted from a current from the other side—the simplest possible case of subtraction. Kirchhoff's law generates the difference in the two drain currents.

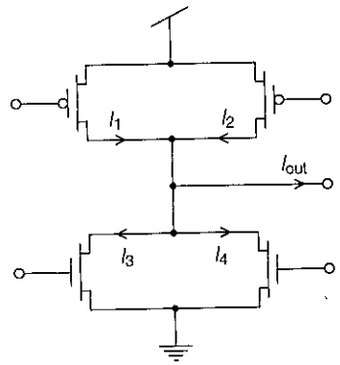

FIGURE 6.4 The Kirchhoff adder. Kirchhoff's law is used to add and subtract current-type signals, shown as the drain currents of two n-channel and two p-channel transistors. In this example, $I_{out} = I_1 + I_2 - I_3 - I_4$.

The output of the Kirchhoff adder of Figure 6.4 can be used as either a current or a voltage. If it is used in the open-circuit mode, its output voltage will be the output current divided by the output conductance, set by the sum of the drain conductances of all transistors connected to the node. The result is just a generalization of the one we obtained for the transconductance amplifier (Equation 5.8 (p. 78)). Like the transconductance amplifier, the open-circuit Kirchhoff adder has a high gain and a certain offset—its output will therefore be at V_{DD} for most of the range of positive outputs, and at ground for most of the range of negative inputs.

We have just seen how addition and subtraction of currents follows directly from the conservation of charge. This is yet another example of the opportunistic nature of evolution. Neural systems evolved without the slightest notion of mathematics or engineering analysis, but with access to a vast array of physical phenomena that implemented important functions of great strategic value. It is evident that the resulting computational metaphor has a range of capabilities that exceeds by many orders of magnitude that of the most powerful computers. In subsequent chapters, we will encounter many additional examples of computations that follow directly from physical laws.

ABSOLUTE VALUE

In many systems applications, it is not the *signed value* of a signal that is important; rather, it is the *absolute value* of the signal. If the signal is a current, it is extremely easy to take the absolute value with a current mirror. A p-channel current mirror can act only as a current source, whereas an n-channel current mirror can act only as a current sink. The positive or negative part of any signal represented as a bidirectional current can thus be taken by the appropriate current mirror. The circuit shown in Figure 6.5 creates a current proportional to the absolute value of a voltage difference. Its operation is based on the fact, noted in Chapter 5, that a simple transconductance amplifier can work with its output

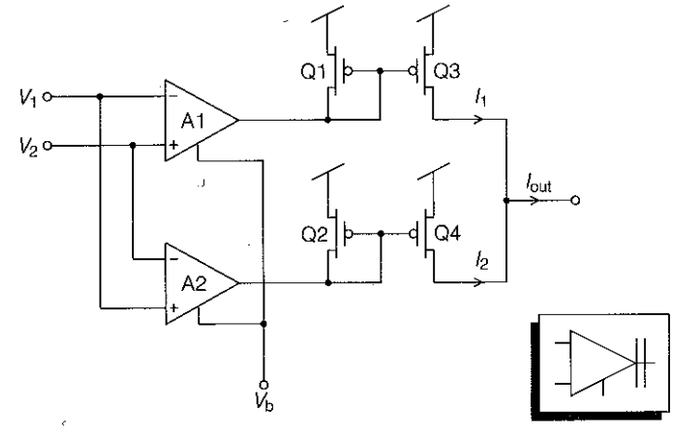

FIGURE 6.5 The absolute-value circuit. The circuit takes a differential voltage as its input and generates a unipolar current as its output. The symbol for the circuit is shown in the inset.

very near to V_{DD}; hence, its output can be worked into a p-channel current mirror. If V_1 is greater than V_2, amplifier A1 creates a current flowing into its output (negative by convention). That current is reflected by the Q1–Q3 current mirror and contributes a positive current to the output. Meanwhile, A2 attempts to put out a positive current. Driving the output voltage toward V_{DD} shuts off the Q2–Q4 current mirror; hence, Q4 contributes no current to the output. When V_2 is greater than V_1, Q4 contributes current to the output, but Q3 is cut off. Therefore, the output current is

$$I_{out} = I_1 + I_2 = I_b \tanh\left(\frac{\kappa|V_1 - V_2|}{2}\right)$$

The I_1 and I_2 currents are the two **half-wave rectified** versions of the input. The sum, I_{out}, is a **full-wave rectified** version of the input. For that reason, we call the absolute-value circuit a **full-wave rectifier**, even though it takes a voltage difference as its input and produces a current as its output.

Because the two halves of the absolute value are generated by separate current mirrors, each half can be copied as many times as necessary. If only one half is needed, one amplifier and one current mirror suffices. Such a **half-wave rectifier** is shown in Figure 6.6.

A great deal of the inhibitory feedback present in biological systems depends on activity in the sensory input channels, but does not depend on the *sign* of the input. For applications such as these, we will find both the full- and half-wave rectifier circuits generally useful. We have created a symbol, or *abstraction*, for these circuits, and for similar circuits with the same function, so that we can represent them conveniently on higher-level circuit diagrams. These abstractions are shown in the lower right-hand corner of Figures 6.5 and 6.6.

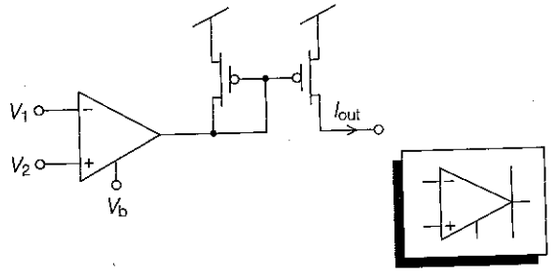

FIGURE 6.6 One half of the absolute-value circuit. This configuration gives an output current that is a half-wave rectified version of the input voltage. The symbol for this circuit is shown in the inset.

MULTIPLICATION

We already mentioned that the transconductance amplifier of Figure 5.3 (p. 70) can be viewed as a **two-quadrant multiplier**. Its output current can be either positive or negative, but the bias current I_b can be only a positive current. V_b, which controls the current, can be only a positive voltage. So the circuit multiplies the positive part of the current I_b by the tanh of $(V_1 - V_2)$. If we plot $V_1 - V_2$ horizontally, and I vertically, then this circuit can work in only the first and second quadrants.

Four-Quadrant Multiplier

To multiply a signal of either sign by another signal of either sign, we need a **four-quadrant multiplier**. We can achieve all four quadrants of multiplication by using each of the output currents from the differential pair (I_1 or I_2) as the source for another differential pair. The principle is illustrated in Figure 6.7. The results for the two drain currents of the differential pair were derived in Equation 5.3 (p. 68)

$$I_1 = I_b \frac{e^{\kappa V_1}}{e^{\kappa V_1} + e^{\kappa V_2}} = \frac{I_b}{2}\left(1 + \tanh\frac{\kappa(V_1 - V_2)}{2}\right) \tag{6.1}$$

and

$$I_2 = I_b \frac{e^{\kappa V_2}}{e^{\kappa V_1} + e^{\kappa V_2}} = \frac{I_b}{2}\left(1 - \tanh\frac{\kappa(V_1 - V_2)}{2}\right) \tag{6.2}$$

Similar reasoning applied to the two upper differential pairs fed by I_1 and I_2

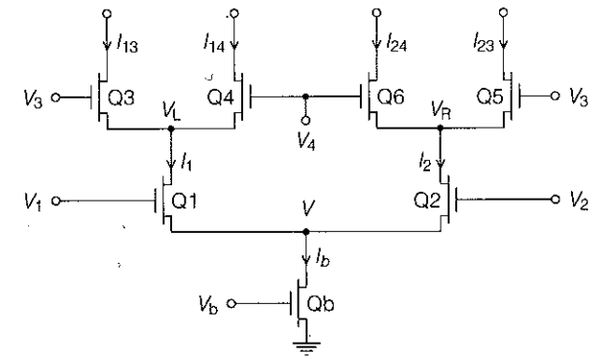

FIGURE 6.7 Partial schematic illustrating the use of the two outputs of a differential pair as current sources for two second-level differential pairs.

leads to expressions for the four upper drain currents.

$$I_{13} = \frac{I_1}{2}\left(1 + \tanh\frac{\kappa(V_3 - V_4)}{2}\right) \tag{6.3}$$

$$I_{14} = \frac{I_1}{2}\left(1 - \tanh\frac{\kappa(V_3 - V_4)}{2}\right) \tag{6.4}$$

$$I_{23} = \frac{I_2}{2}\left(1 + \tanh\frac{\kappa(V_3 - V_4)}{2}\right) \tag{6.5}$$

$$I_{24} = \frac{I_2}{2}\left(1 - \tanh\frac{\kappa(V_3 - V_4)}{2}\right) \tag{6.6}$$

When we had two quadrants, we had to have two wires: one for each quadrant. In other words, the wire on the right in Figure 5.3 (p. 70) carried I_2—the current that was subtracted from I_{out} (when V_1 is less than V_2); the wire on the left carried I_1—the current that was added to the output (when V_1 is greater than V_2). So, we can think of each wire as responsible for a quadrant in the multiplication. A four-quadrant multiplier can take the difference between two voltages (in this case V_3 and V_4), and multiply that difference by a difference between two other voltages (V_1 and V_2). Now we can use all four quadrants, because V_3 can be either less or greater than V_4, and V_1 can be either less or greater than V_2. We use the input voltage differences to generate currents, so we now have four wires, one to carry each current, which can be identified with each of the quadrants. In the small-signal range, where $V_1 - V_2$ and $V_3 - V_4$ are both less than $kT/(q\kappa)$, $\tanh x$ is approximately equal to x, and all four wires will carry information about the product. When the input voltage differences get large compared with $kT/(q\kappa)$, however, appreciable

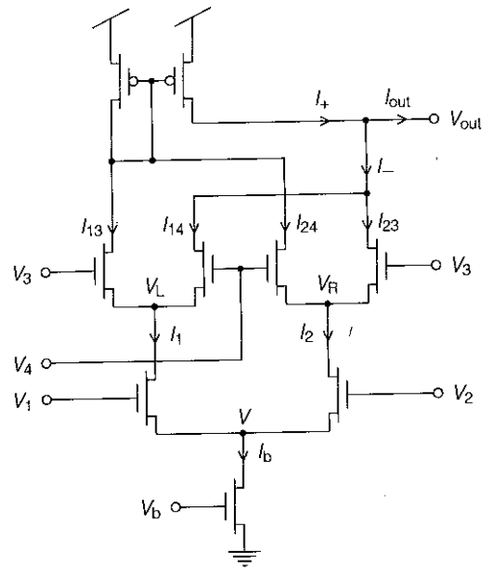

FIGURE 6.8 Schematic of the Gilbert multiplier. In the range where the tanh x is approximately equal to x, this circuit multiplies $V_1 - V_2$ by $V_3 - V_4$.

current will flow only in its respective wire. For example, if $V_3 - V_4$ is much larger than $kT/(q\kappa)$, and $V_1 - V_2$ is much larger than $kT/(q\kappa)$, then I_{13} will be nearly equal to I, and only the leftmost wire will carry any appreciable current.

We are now in a position to combine the four currents to generate the final product. The simplest approach to forming the product is shown in Figure 6.8. This circuit is known as the **Gilbert transconductance multiplier** [Gilbert, 1968], named for Barrie Gilbert, one of the great figures of analog integrated circuits. The original Gilbert multiplier was implemented with bipolar transistors, but was otherwise identical to the circuit of Figure 6.8.

We sum I_{13} and I_{24} to create I_+, the positive contribution to the output current. We can compute I_+ by adding Equations 6.3 and 6.6:

$$I_+ = \frac{I_1 + I_2}{2} + \frac{I_1 - I_2}{2} \tanh \frac{\kappa(V_3 - V_4)}{2} \tag{6.7}$$

Similarly, I_{14} and I_{23} are summed to create I_-, the negative contribution to the output current. We can compute I_- by adding Equations 6.4 and 6.5:

$$I_- = \frac{I_1 + I_2}{2} - \frac{I_1 - I_2}{2} \tanh \frac{\kappa(V_3 - V_4)}{2} \tag{6.8}$$

The output is formed by subtracting I_- from I_+. We can thus compute I_{out} by

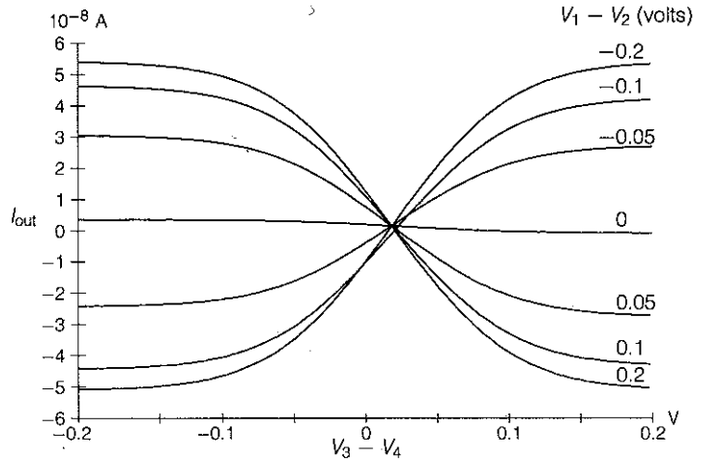

FIGURE 6.9 Output current of the basic Gilbert multiplier as a function of $V_3 - V_4$, for several values of $V_1 - V_2$. The tanh character of the output is readily apparent.

subtracting Equation 6.8 from Equation 6.7:

$$I_{out} = (I_1 - I_2) \tanh \frac{\kappa(V_3 - V_4)}{2} \tag{6.9}$$

Substituting Equations 6.1 and 6.2, we obtain:

$$I_{out} = I_b \tanh \frac{\kappa(V_1 - V_2)}{2} \tanh \frac{\kappa(V_3 - V_4)}{2} \tag{6.10}$$

The family of experimental curves taken from the circuit of Figure 6.8 is shown in Figure 6.9. The tanh behavior for both differential inputs is evident. For input voltage differences both less than $kT/(q\kappa)$, the tanh x is approximately equal to x, and the Gilbert circuit is indeed a multiplier, with the additional advantage that the output current saturates if one of the inputs gets stuck at some unseemly voltage. That is the good news; now let us look at the bad news.

Limits of Operation

The Gilbert circuit is even more constrained by the V_{min} problem than was the simple transconductance amplifier. In the multiplier, the output voltage is constrained by V_3 and V_4 rather than by V_1 and V_2:

$$V_{out} > V_{min} = \kappa(\min(V_3, V_4) - V_b)$$

The multiplier has the further limitation that source voltages V_L and V_R must satisfy the V_{min} condition for the bottom differential pair.

$$(V_L, V_R) = \kappa(\max(V_3, V_4) - V_b) > \kappa(\min(V_1, V_2) - V_b)$$

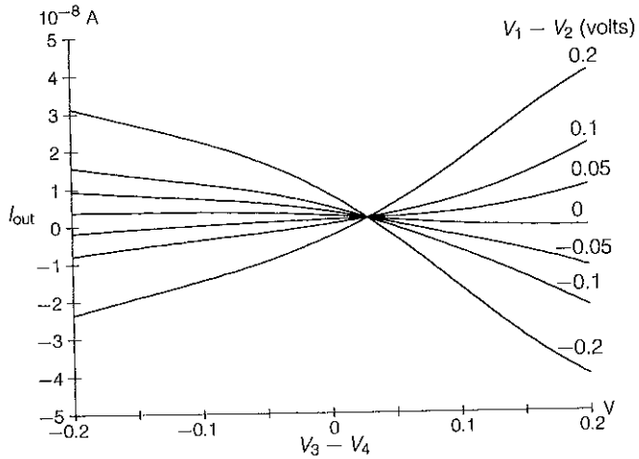

FIGURE 6.10 Output characteristics of the basic Gilbert multiplier. V_1 and V_2 are slightly greater than V_3 and V_4. The output current is limited by the V_{min} problem, caused by the low values of V_3 and V_4 on the first differential stage.

from which we conclude

$$\max(V_3, V_4) > \min(V_1, V_2) \tag{6.11}$$

We might be able to design a circuit for which Equation 6.11 is satisfied. A generally useful circuit, however, must be able to handle arbitrary inputs. In general, we cannot guarantee the relative range of the input voltages.

Figure 6.9 shows the circuit operating within its limits. Figure 6.10 shows how it looks when it starts to get into trouble. The V_2 input is set slightly above V_4, and the behavior is no longer acceptable. All input voltages are approximately 2 volts; we might very well want to use such voltage values. Once the limitation of Equation 6.11 is violated, the circuit is unusable.

Wide-Range Multiplier

If we need a multiplier that does not suffer from the limitations of Equation 6.11, we can use the same technique that allowed the output from the transconductance amplifier to cover a wider range. We use current mirrors to isolate the V_1–V_2 differential pair from the two V_3–V_4 pairs, as shown in Figure 6.11. The only unusual trick we have used is to run the V_3–V_4 stages upside down by using p-channel devices for Q7–Q9 and Q8–Q10.

The wide-range multiplier contains not quite twice as many transistors as the basic Gilbert circuit does, and has exactly the same output characteristic. The usable range of V_3 and V_4 is independent of V_1 and V_2. All voltages—input and output—work from very close to V_{DD} to very close to ground. The output current measured over a wide range of V_3 for several fixed values of differential input

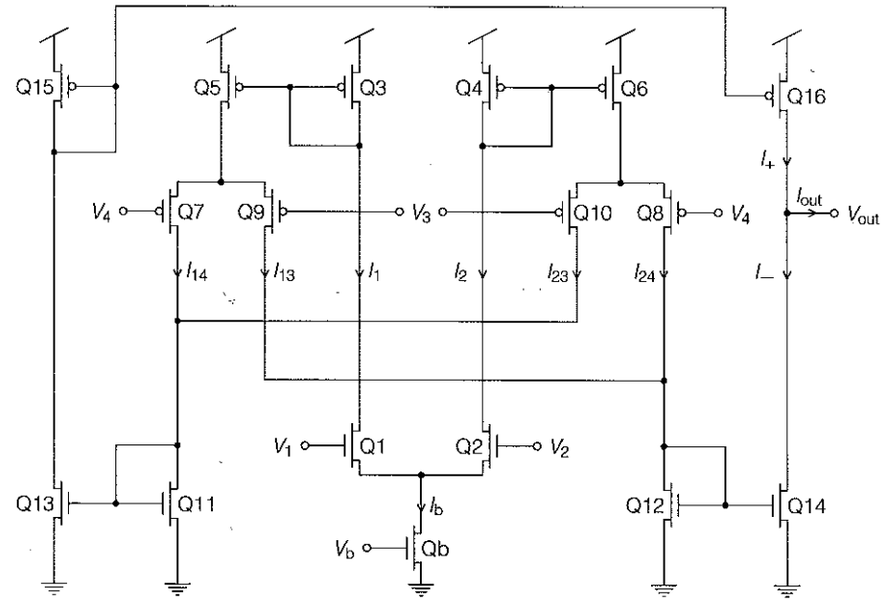

FIGURE 6.11 Wide-range version of the Gilbert multiplier. The ranges of V_1 and V_2 are independent of the values of V_3 and V_4, and vice versa.

$V_3 - V_4$ is shown in Figure 6.12. For input voltages more than about 1 volt below V_{DD}, the output current is relatively independent of the absolute input voltage level, as expected of a true differential amplifier. The ratio of the dependence of output current on the differential input voltage to its dependence on the absolute input voltage level is called the **common-mode rejection ratio (CMRR)**. For the top curve in Figure 6.12, the output current changes 3.9×10^{-9} amp for an extrapolated output voltage change of approximately 5 volts. In the steep part of the tanh, an input voltage change of approximately 35 millivolts is required to cause the same change in output current. For this set of inputs, the CMRR is thus 140 to 1.

Output current curves measured over a wide range of V_1 for several fixed values of differential input $V_1 - V_2$ are shown in Figure 6.13. For input voltages more than about 1 volt above ground, the output current is relatively independent of the absolute input-voltage level, as observed for the $V_3 - V_4$ inputs. From these data, the CMRR for the lower differential pair is about 87 to 1.

On the one hand, the wide-range multiplier has many things going for it. On the other hand, there are yet more transistors to be matched. So there are more ways this circuit can get unbalanced than there are in the simple Gilbert circuit. In practice, however, the wide-range multiplier does not seem to be any more adversely affected by transistor mismatch than the simple one is. We will see a system application of the multiplier in Chapter 14.

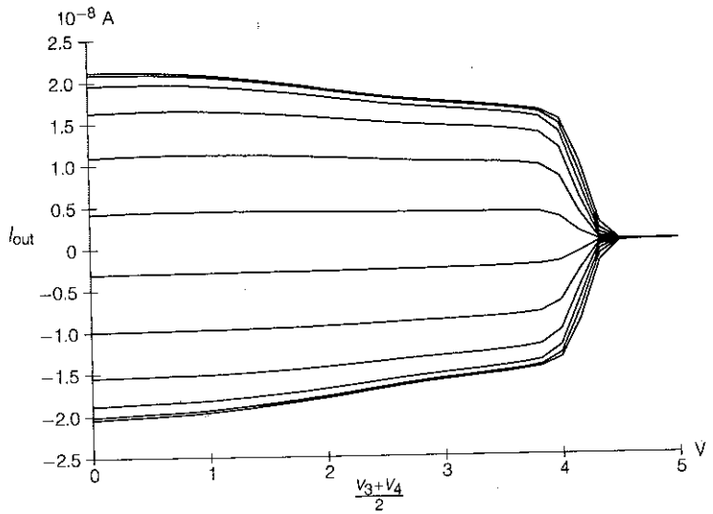

FIGURE 6.12 Dependence of the output current on the average (common-mode) upper input voltage. At input voltages near V_{DD}, the upper differential pair ceases to function. The data were taken for $V_3 - V_4$ equal to 0.05 volts, and $V_1 - V_2$ at 0.05-volt intervals.

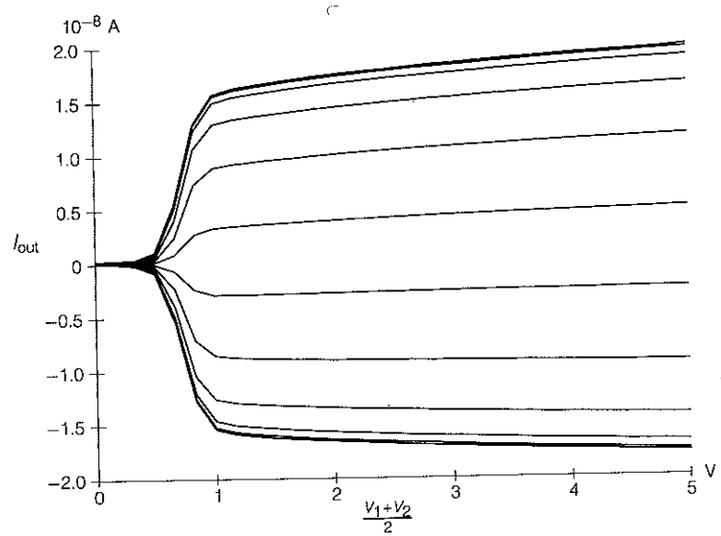

FIGURE 6.13 Dependence of the output current on the average (common-mode) lower input voltage. At input voltages near ground, the lower differential pair ceases to function. The data were taken for $V_1 - V_2$ equal to 0.05 volts, and $V_3 - V_4$ at 0.05-volt intervals. The output conductance of the lower differential pair is higher than that of the upper differential pair, because the doping of the substrate is less than that of the well (see Appendix A).

NONLINEAR FUNCTIONS

A large part of the nervous system deals with sensory input of one kind or another. Sensory signals can vary in intensity over many orders of magnitude. To deal with signals that have such a large **dynamic range**, it is essential that we have some method of compressing the range of signal values. Techniques that accomplish a reduction in the dynamic range of a signal generally are referred to as mechanisms for *automatic gain control*. We accomplish the simplest form of automatic gain control by applying a **compressive nonlinearity** to the signal. Examples of compressive functions are the logarithm, square root, and tanh.

Exponentials and Logarithms

We saw in Chapter 3 that a diode-connected transistor creates a voltage that is proportional to the logarithm of the input current. This voltage can be used to control the output currents of other transistors—a technique we used in Figure 6.1—but it is below the range of usable inputs for circuits such as transconductance amplifiers or multipliers. A voltage that is well within the operating range of these circuits can be generated by two diode-connected transistors in series, as shown in Figure 6.14(a). The inverse operation—creating a current proportional to the exponential of a voltage—is accomplished by the circuit of Figure 6.14(b). The relationship between voltage and current for these circuits is shown in Figure 6.14(c).

From Equation 3.15 (p. 39), we know that the saturated drain current I_{sat} is exponential in the gate–source voltage V_{gs}:

$$I_{sat} = I_0 e^{\kappa V_g} e^{-V_s}$$

Applying this expression to Q1 and Q2, we obtain

$$I = I_0 e^{\kappa V_1} = I_0 e^{\kappa V_2 - V_1} \tag{6.12}$$

Taking logarithms of the last two terms

$$V_2 = \frac{\kappa + 1}{\kappa} V_1$$

From which we conclude

$$\ln \frac{I}{I_0} = \frac{\kappa^2}{\kappa + 1} V_2 \tag{6.13}$$

In the ideal case where κ is equal to one, Equation 6.12 has the solution

$$I = I_0 e^{V_2/2}$$

and we would expect the slope of the upper curve of Figure 6.14(c) to be twice that of the lower curve.

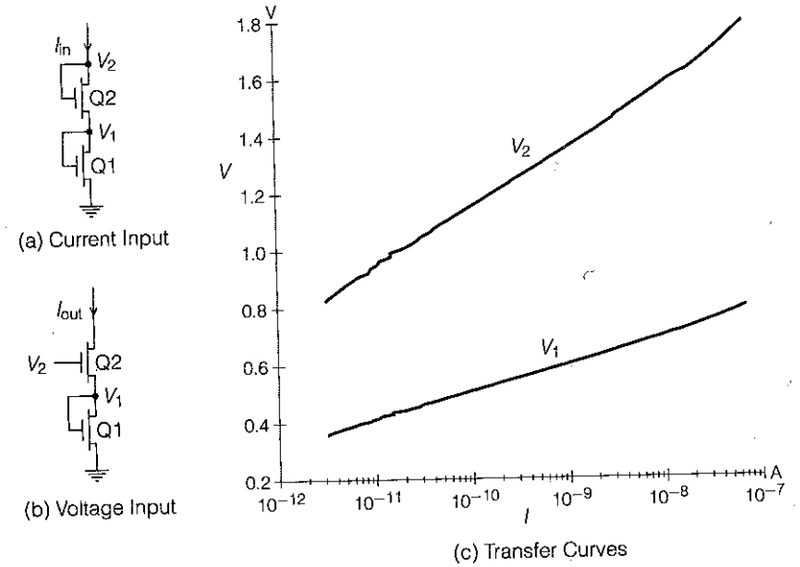

FIGURE 6.14 Two circuits that exploit the natural logarithmic voltage–current characteristic of the MOS transistor. The voltage-input version (b) generates an output current that is exponentially related to the input voltage. The current-input version (a) generates an output voltage that is proportional to the logarithm of the input current. The advantage of either arrangement over a single transistor is that the input voltage range is well within the normal operating range of circuits such as the transconductance amplifier. The measured transfer curve for V_2 (c) shows an e-fold increase in current for each 90-millivolt increase in V_2. This value corresponds to $\kappa \approx 0.7$.

Square Root

A variant of the circuit of Figure 6.14 can be used to implement a compressive nonlinearity that is more gentle than the logarithm. One version of such a circuit is shown in Figure 6.15. The voltage across Q1 can be written

$$\kappa V_3 = V_1 + \ln \frac{I_{in}}{I_0} \tag{6.14}$$

From Equation 6.13,

$$\ln \frac{I_{out}}{I_0} = \frac{\kappa^2}{\kappa + 1} V_3 \tag{6.15}$$

Substituting Equation 6.14 into Equation 6.15, we find the dependence of I_{out} on I_{in}:

$$\frac{I_{out}}{I_0} = \left(\frac{I_{in}}{I_0} e^{V_1} \right)^{\frac{\kappa}{\kappa+1}}$$

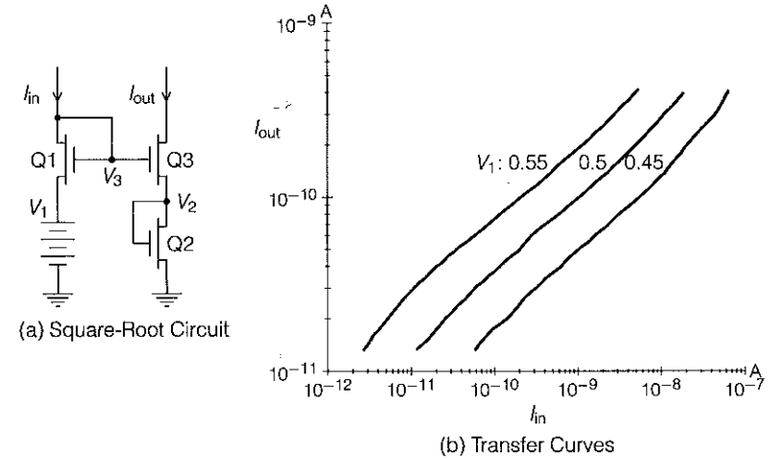

FIGURE 6.15 Compression circuit that generates an output current proportional to a fractional power of the input current. Ideally, the output would be the square root of the input; for the data shown, I_{out} is approximately equal to $I_{in}^{0.41}$, corresponding to $\kappa \approx 0.7$. The voltage V_1 can be used to set the scale of the output, as shown on the measured transfer curves.

The experimental dependence of I_{out} on I_{in} is shown in Figure 6.15(b), for several values of V_1. The dependence is between a square root and a cube root—this is a very nice compressive nonlinearity for many uses.

SUMMARY

We have seen how we can add and subtract currents using Kirchhoff's law, how we can subtract voltages using a differential amplifier, how we can multiply a voltage difference by a current in a transconductance amplifier, and how we can multiply two voltage differences using a Gilbert multiplier. Logarithms and exponentials are primitives provided by the Boltzmann relation, and we have pressed them into service to create a fractional-power compressive nonlinearity. Once again, physics has given us its own natural interpretation of certain mathematical functions. If we can use the primitives nature gives us, we can create formidable computations with physically simple structures. As we evolve the technology to the system level, we will see many applications of this opportunistic principle—the nervous system being the best example of all!

REFERENCES

Gilbert, B. A precise four-quadrant multiplier with subnanosecond response. *IEEE Journal of Solid-State Circuits,* SC-3:365, 1968.